# SPRINGFIELD ARMORY®

# HELLION

## OPERATION & SAFETY MANUAL

**IMPORTANT SAFETY INFORMATION INSIDE**

Read this manual before handling this firearm. Keep this manual with your firearm and review it before each use.
Do not allow others to handle or fire your firearm until they have read this manual.
Transfer this manual with the firearm upon ownership change.

**THIS MANUAL IS FOR HELLION FIREARMS ONLY.**

Be a responsible firearm owner. Use it safely, store it securely, and always transfer a firearm responsibly and legally.

**DOWNLOAD THIS MANUAL ON OUR WEBSITE: WWW.SPRINGFIELD-ARMORY.COM**

Always check website for updated versions of operation & safety manuals

# CONTENTS

Read and Understand this Manual . . . . . 3
Know Your Firearm. . . . . 4
Collapsible Stock . . . . . 5
Safety Rules . . . . . 6
Safety Device . . . . . 12
Determining Firearm is Unloaded/Safe. . . . . 13
Ammunition. . . . . 14
Loading/ Preparing To Fire . . . . . 16
Firing . . . . . 17
Unloading. . . . . 19
Malfunction Warning . . . . . 20
Field Strip . . . . . 22
Reassembly . . . . . 28
Detailed Maintenance/Points of Lubrication . . . . . 30
Adjustable Gas Block . . . . . 31
Parts Diagram . . . . . 32
Sight Adjustment . . . . . 40
Cable Lock . . . . . 41
Limited Warranty . . . . . 42

**NOTE: The information in this manual applies to all HELLION models regardless of caliber unless otherwise noted.**

**If you have any questions concerning information in this manual, call Springfield's Consumer Safety Department at: (309) 944-5631 for assistance.**

# BEFORE LOADING AND FIRING THIS FIREARM, READ AND UNDERSTAND THE INFORMATION IN THIS MANUAL.

**WARNING** **The Hellion rifle is configurable to eject spent cartridges to the right or to the left. The rifle is set up for right side ejection from the factory. If you fire from the left shoulder you will need to reconfigure the rifle for left side ejection! (See page 25).**

This is an auto loading firearm. It is immediately loaded and ready to fire again after each shot until all cartridges loaded in magazine have been fired. The firearm is able to fire both with and without the magazine in place. REMOVING THE MAGAZINE DOES NOT UNLOAD THE FIREARM NOR DOES IT ENGAGE A SAFETY. THE FIREARM IS NOT UNLOADED UNTIL THE MAGAZINE IS REMOVED AND THE CHAMBER IS EMPTY.

## ABOUT YOUR OWNER'S MANUAL

This is an instruction booklet on how to operate this firearm with some basic safe handling rules. It does not attempt to provide information about using a firearm to defend yourself, how to hunt, or for competitive or target shooting. It is important to receive training from a competent firearms instructor prior to engaging in any of these activities. The National Rifle Association, your local or state authorities, or your firearm dealer may provide information regarding available instructors or training courses. If you have a license to carry concealed, never do so without prior instruction from a certified instructor. Using a firearm for self defense is a complex subject with dangers and risks for which you must be properly trained. Every safety rule has a reason behind it - read the rules carefully and understand why each is important for safety.

It is recommended that every person receive instructions from a competent firearms instructor before handling this or any other firearm.

**Know and obey all firearms laws and regulations, which may vary from city to city and state to state. Do not give a firearm to someone who is not allowed to own a firearm or who may use it for a criminal purpose.**

**WARNING** **Altering your HELLION firearm in any way could violate local, state or federal laws/regulations.**

## Used firearms

If you purchased this firearm as a used firearm, have it inspected and tested by a competent gunsmith before you use it. Guns are sometimes altered and may require repair before they can be used safely.

## Store firearms safely in the home

Store firearms unloaded, locked and in a secure place. Obey firearm storage laws. Store firearms and ammunition separately. Because your children may be in other homes where firearms are stored, you should show them what to do if they see or find a firearm by showing them the Eddie Eagle video available from the NRA by calling (703) 267-1000.

**OBEY ALL FIREARMS LAWS WHEN BUYING AND SELLING FIREARMS. NEVER BUY A GUN INTENDING TO TRANSFER IT TO SOMEONE WHO IS PROHIBITED FROM OWNING FIREARMS. NEVER, EVER BE A "STRAW PURCHASER."**

# KNOW YOUR FIREARM

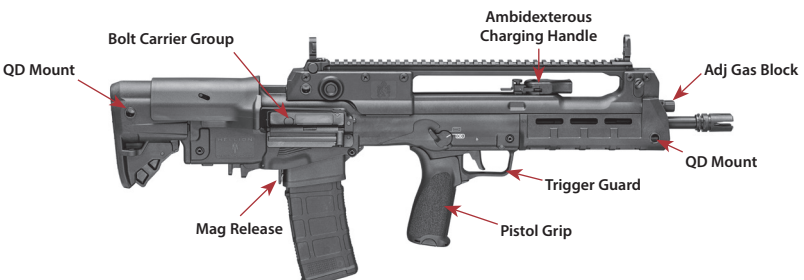

# COLLAPSIBLE STOCK ADJUSTMENT

Your HELLION rifle is equipped with an adjustable buttstock. Follow the procedure below to adjust the stock to one of five positions.

1. Remove magazine and unload firearm (See Page 16). Rotate the safety selector to the "SAFE" position (see page 12).
2. **POINT GUN IN SAFE DIRECTION WHILE KEEPING FINGER OFF THE TRIGGER.**
3. Depress the latch lever (Figure 5) and slide the stock to the desired length, then ensure the latch is engaged by moving the stock back and forth.

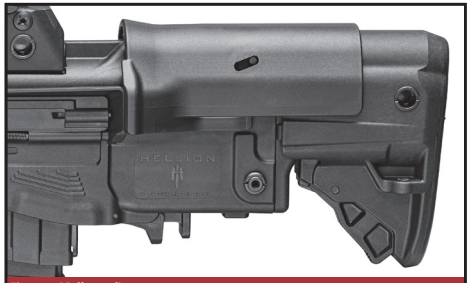

Figure 5 (Collapsed)

Figure 5 (Fully Extended)

# SAFETY RULES

## READ AND UNDERSTAND THESE SAFETY RULES

**Be A Safe Shooter.**

**ACCIDENT** ***(ak´ si dent) N. 1. An unintentional or unexpected happening that is undesirable or unfortunate, especially one resulting in injury, damage, harm or loss.***

**Don't be the cause of an accident.**

A responsible firearm owner is safety minded and always handles firearms in a safe manner by following the basic rules of safe shooting and by using common sense in the handling of a firearm.

Store firearms unloaded, locked, and in a secure place. Keep keys for locks separate from lock and in a secure place away from children. Keep firearms out of reach of children. You are responsible for children's safety.

**Be A Responsible Gun Owner.**

- **Treat all firearms as if they are loaded at all times.**
- Never point a firearm at any person or thing you do not intend to shoot.
- Keep your finger off the trigger until you are on target and have made the DECISION to fire.
- Be sure you have positively identified your target.
- **ALWAYS KEEP THE MUZZLE POINTED IN A SAFE DIRECTION.**
- **Do not drop your firearm.** Make sure you maintain control of your firearm at all times. **If it falls, it may fire.** If you do drop it, unload it and examine it to be sure it works correctly. Do not attempt to fire it again until you have completed this safety check.
- Never put your hand over the muzzle of the firearm.
- Keep your finger(s) off the trigger and out of the trigger guard until you are actually aiming at your target, and made the decision to fire.
- Under no circumstances should the owner/purchaser of this firearm allow it to come into possession of or be handled by small children or a mentally handicapped individual.
- **DO NOT COVER THE EJECTION PORT WITH YOUR HANDS WHEN LOADING/UNLOADING YOUR FIREARM.**

**TREAT EVERY GUN AS IF IT IS LOADED ... ALL THE TIME.**

# BE A RESPONSIBLE FIREARM OWNER!

- Never rely on a firearm's "safety features" to protect you from unsafe firearm handling. A safety is only a mechanical device, not a substitute for common sense.
- Keep your finger off the trigger until you are on target and have made the DECISION to fire.
- Be sure of your target and backstop before you shoot. Ask yourself what your bullet will hit if it misses or goes through the target.
- Before shooting, be sure the barrel is clear of obstructions, including excessive oil and grease.
- Do not let water, snow, mud or other materials enter the barrel.
- Do not pull a firearm toward you by the muzzle.
- Always hold your firearm so you control the direction of its muzzle in case you fall or stumble.
- **ALWAYS KEEP THE MUZZLE POINTED IN A SAFE DIRECTION.**
- If anything does get into the barrel, remove cartridges, and clean bore immediately before attempting to shoot. Obstructed barrels can burst and injure you and/or bystanders.
- Maintain possession of your firearm at all times when you are on the firing range or during target practice. **DO NOT ALLOW OTHERS TO HANDLE YOUR FIREARM UNLESS THAT PERSON IS BEING INSTRUCTED OR TRAINED.**

**WARNING** **The HELLION firearm, like all firearms, is a dangerous firearm if not handled properly.**

# BE A RESPONSIBLE FIREARM OWNER!

- **ALWAYS KEEP THE MUZZLE POINTED IN A SAFE DIRECTION.**
- Firearms and alcohol or drugs do not mix. Do not take them before or during shooting activities. Your vision, coordination and judgment could be impaired, making firearm handling unsafe.
- When taking medication, seek a doctor's advice to be sure you can operate and handle your firearm safely.
- Receive training from a competent firearms instructor before using any firearm.
- Before attempting to shoot, practice operations by using snap caps (dummy rounds). Become familiar with the safety features, trigger control, and handling of the firearm.
- Make sure you maintain control of your firearm at all times.
- **Always keep and carry your firearm with an empty chamber until you intend to shoot, so your firearm cannot be fired unintentionally.**
- Firearms should be unloaded when not in use. This means both the chamber and magazine are empty.
- When transferring a firearm by hand, always open the action and check to assure that it is unloaded prior to handing it over to someone.
- Never take anyone's word that a firearm is unloaded. When receiving a firearm, always open the action and check that it is unloaded.

# BE A SAFE FIREARM OWNER!

- **Do not try to change your firearm's trigger pull, because alterations of trigger pull usually affect the fit of critical parts and might cause accidental firing.**
- Never use a firearm that jams or fails to function properly. Should this occur, return it to Springfield, Inc. for warranty/repair.
- If your shot sounds weak or underpowered, it could mean a bullet is in the chamber/bore. The gun should be immediately unloaded and the chamber/bore checked for obstructions before refiring.
- **DO NOT "HORSEPLAY"** with a firearm. Your firearm cannot think, but you can. Firearm safety depends on you.

**WARNING**

## IMPORTANT WARNING

***There is no safe way to discharge a firearm in a home or apartment. Bullets will go through walls, floors, furniture, and appliances and still cause serious injury or death to persons in the house, next-door, or outside.* Accidental discharges indoors ALWAYS result in property damage or personal injury.**

**WARNING** **When you squeeze the trigger, you must expect the firearm to fire. You must take full responsibility for firing it. Your care can avoid accidental discharge and thereby avoid accidental injury and death.**

# READ THESE RULES!

- Load firearm only when on range preparing to fire. Unload it before leaving range.
- **Treat every firearm as if it is loaded ... all the time!**
- Load and unload with the firearm muzzle pointed in a safe direction.
- Be certain firearm is unloaded before cleaning.
- Completely unload your firearm before storing, travelling, standing it against an object, laying it down, entering a house, car, truck, boat, RV/camper, building, or handing it to someone.
- **Never leave a loaded firearm unattended.**
- Tragedy may result if a child finds your firearm and plays with it. Keep every firearm secure. Children do not understand firearms can kill.
- Store firearms and ammunition separately. Both should be placed beyond children's reach.
- Obey all laws regarding the storage and security of firearms in the home.
- Know and obey the laws regarding the transportation and carrying of firearms.
- **Old or reloaded ammunition may cause damage to the firearm and/or injure you or others. Use only clean, dry, original, high-quality, commercially manufactured ammunition. Using reloaded ammunition may void the warranty.**
- **ALWAYS REMEMBER, REMOVING THE MAGAZINE DOES NOT UNLOAD THE RIFLE NOR DOES IT ENGAGE A SAFETY.**
- **ALWAYS REMEMBER, THE FIREARM IS NOT UNLOADED UNTIL THE MAGAZINE IS REMOVED AND THE CHAMBER IS EMPTY.**
- **ALWAYS REMEMBER, THIS FIREARM IS ABLE TO FIRE WITH OR WITHOUT THE MAGAZINE IN PLACE.**

# TREAT EVERY FIREARM AS IF IT IS LOADED... ALL THE TIME!

- Many ammunition identifications sound similar. Make sure you use the right caliber/size ammunition in your firearm.
- If firearm fails to fire when the trigger is pulled, keep it pointed at the target for at least 30 seconds. Remove the magazine before opening the action. Remove the cartridge from the chamber. Sometimes slow primer ignition will cause a "hang fire" and the cartridge will go off after a short pause.
- When group firing, always appoint someone to maintain safety control. Obey his/her commands immediately and completely.
- While shooter is loading, firing, and unloading, spectators need to remain behind shooter.
- **Always wear protective glasses when shooting.**
- **Always wear hearing protection when shooting.**
- Never shoot at hard flat surfaces or water; bullets will ricochet unpredictably.
- **Do not alter or modify your firearm.**
- Have your firearm serviced regularly by a qualified gunsmith.
- Discharging firearms in poorly ventilated areas, cleaning firearms, or handling ammunition may result in exposure to lead and other substances known to cause birth defects, reproductive harm, cancer and other serious physical injury. Have adequate ventilation at all times. Wash hands thoroughly after firing your firearm, after cleaning your firearm, or whenever you have handled ammunition.
- Always use quality ammunition.
- **ALWAYS KEEP THE MUZZLE POINTED IN A SAFE DIRECTION.**

**Safety and instruction manuals are available from Springfield, Inc.**

**Always wear eye and ear protection when using any firearm.**

# SAFETY DEVICE

The HELLION is equipped with a safety selector located just above and to the rear of the trigger. Any time the firearm is loaded the safety selector should be moved to the “SAFE” position (Figure 12-1). To fire simply rotate the safety selector to the “FIRE” position (Figure 12-2). Return to the “SAFE” position after firing.

Figure 12-1

Figure 12-2

# DETERMINE FIREARM IS UNLOADED/SAFE

**Always make sure firearm is unloaded before handling.**

1. **POINT FIREARM IN SAFE DIRECTION WHILE KEEPING YOUR FINGER OFF OF THE TRIGGER.**
2. Press magazine release to remove magazine (Figure 13-1).
3. With finger off trigger fully retract charging handle (Figure 13-2).
4. Carefully inspect chamber to make sure it is empty.
5. Slowly lower charging handle.

When chamber is empty, rotate the safety selector to "SAFE" (see page 12) and close the ejection port cover.

Figure 13-1

**Caution: Do not cover the ejection port with your hand when firing your rifle.**

**WARNING** **Firearm is not empty or unloaded until the magazine is removed and the chamber is empty. To properly clear a firearm, remove the magazine, then pull charging handle back and check the chamber.**

Figure 13-2

# AMMUNITION

Locate the cartridge designation, for caliber, marked on the firearm's barrel. This information indicates the correct ammunition that must be used in your firearm (FIGURE 14-1).

HELLION firearms are gas operated firearms and as such rely on the amount of pressure of the gases developed when the cartridge is fired.

**NOTE: If your HELLION is chambered in 5.56 NATO, it will fire both 5.56 NATO and .223 Remington ammunition.**

You are responsible for selecting ammunition that meets industry standards and is appropriate in type and caliber for this firearm.

***Never mix ammunition.***

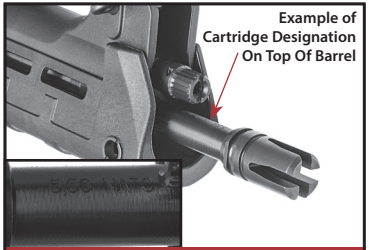

Figure 14-1

**WARNING** *Never use ammunition not specifically designated for use in your firearm. Failure to use the correct type or caliber of ammunition may cause the firearm to jam, or fail to fire, or may generate excessive pressure which can damage or even rupture your firearm, causing personal injury or death to the shooter or bystanders.*

**WARNING** *Always inspect your ammunition before using it. Never use dirty, corroded or damaged ammunition. A burst cartridge may result, causing damage to the firearm and personal injury or death to the shooter or bystanders.*

**WARNING** *In some cases, a round of ammunition not specified on your firearm and not listed as alternate ammunition in this manual, may fit into the chamber. Firing this ammunition may cause a rupture resulting in damage to the firearm and personal injury or death to the shooter or bystanders. For more information regarding usage of caliber combination, refer to: www.SAAMI.org*

# AMMUNITION

A firearm and ammunition are a system and must work together. There are different types of ammunition for different types of firearms. Your firearm has been designed for ammunition of a specific type and a specific gauge or caliber. It is important to select the proper ammunition for your firearm.

Different combinations of bullet velocity, bullet weight and firearm weight can have major impact on felt recoil; high felt recoil can be uncomfortable to some shooters.

**CAUTION:** Use of ammunition manufactured with corrosive primers in this firearm is not recommended and will cause oxidation to develop on any metal parts of the firearm. To prevent such oxidation, the residue from corrosive primers must be completely removed from all metal parts after each time ammunition with corrosive primers is used in this firearm. Conventional oil or solvent-based firearm cleaners WILL NOT dissolve the residue from corrosive primers. Residue from corrosive primers MUST be completely dissolved with a water-based cleaner. After the corrosive residue has been completely dissolved from all metal parts, remove any excess water-based cleaner from the firearm. Finally, lubricate the firearm as instructed in the Safety and Instruction Manual. Failure to follow these instructions will cause damage to the firearm and may affect the ability of the firearm to function properly.

Check with the ammunition manufacturer or a qualified gunsmith if you are unsure whether the particular ammunition you plan to use in this firearm has been manufactured with corrosive primers. If in doubt, follow all the instructions above to prevent oxidation caused by ammunition manufactured with corrosive primers.

Ammunition manufactured by SAAMI member companies does not have corrosive primers.

# LOADING/PREPARING TO FIRE

**Always wear eye and ear protection when using any firearm.**

**WARNING** **The Hellion rifle is configurable to eject spent cartridges to the right or to the left. The rifle is set up for right side ejection from the factory. If you fire from the left shoulder you will need to reconfigure the rifle for left side ejection! (See page 25).**

1. Place the **EMPTY** magazine in the magazine well, locate in bottom of firearm. Make sure the magazine is **EMPTY** or you will inadvertently load the firearm. Push firmly enough on bottom of magazine to make sure it is properly seated. A distinctive "click" will confirm the magazine has been properly inserted. Pull the charging handle completely to the rear until the bolt carrier locks back. Return the charging handle to the latched position and rotate the safety selector to "SAFE" (see page 12).
2. Depress magazine release and remove magazine (Figure 16-1).
3. Ensure that you are using the proper caliber ammunition for your firearm. Place rim of first cartridge on top of follower (Figure 16-2) then push the cartridge down on the follower until the lips capture the round (Figure 16-3). Load successive rounds by pushing cartridge down on previously loaded cartridge. Use only clean, dry, original, high quality, commercially manufactured ammunition. Using reloaded ammunition may void warranty.
4. POINT FIREARM IN A SAFE DIRECTION AND KEEP FINGER OFF TRIGGER. Re-insert **LOADED** magazine into magazine well, located in bottom of firearm. Push firmly enough on bottom of magazine to make sure it is properly seated.

**Caution: Do not slam or forcefully jam magazine into magazine well.**

5. Charge the firearm by firmly pulling the charging handle to the rear and releasing it. The bolt carrier group will thrust forward and load a cartridge into the chamber. Or depress bolt catch (Figure 16-4) to release BCG forward.
6. Rotate the safety selector to "SAFE" (see page 12) if not there already.
7. **The firearm is now loaded and ready to fire.**

**Caution: Never load cartridge by hand directly into the chamber.**

**WARNING** **Never touch the trigger when loading or unloading the firearm.**

Figure 16-1

Figure 16-2

Figure 16-3

Figure 16-4

# FIRING

**Point firearm in a safe direction at all times.**

If you have never fired a firearm before, follow the sequence of operations shown here without ammunition or with snap caps.

Then load only **one** cartridge into the magazine for your first live ammunition firing.

**WARNING** **The Hellion rifle is configurable to eject spent cartridges to the right or to the left. The rifle is set up for right side ejection from the factory. If you fire from the left shoulder you will need to reconfigure the rifle for left side ejection! (See page 25).**

1. **POINT FIREARM IN A SAFE DIRECTION WHILE KEEPING YOUR FINGER OFF OF THE TRIGGER.**
2. Load cartridge into chamber from magazine following the procedure described on page 16. Rotate safety selector to "SAFE" (see page 12) if not there already.
3. Grasp grip of firearm firmly. **(Place buttstock against shoulder.)**

**CAUTION: THE FIREARM IS NOW READY TO FIRE. BE PREPARED FOR NOISE AND RECOIL WHEN FIREARM FIRES.**

**Always wear eye and ear protection when using any firearm.**

**Safety and instruction manuals are available from Springfield, Inc.**

4. Aim firearm at target by aligning sights. Rotate safety selector to "Fire" (see page 12).
5. Now lightly place finger on trigger, and slowly squeeze trigger to fire the firearm. Spent cartridge is expelled up and to the right.

**NOTE: This is an auto loading firearm. It is immediately loaded and ready to fire again after each shot until all cartridges loaded in magazine have been fired. The firearm is able to fire both with and without the magazine in place.**

6. Rifle will automatically be ready to fire again after each shot until all cartridges loaded in magazine have been fired.

**REMOVING THE MAGAZINE DOES NOT UNLOAD THIS FIREARM NOR DOES IT ENGAGE A SAFETY. THIS FIREARM IS NOT UNLOADED UNTIL THE MAGAZINE IS REMOVED AND THE CHAMBER IS EMPTY.**

**WARNING** **Loading the HELLION by manually inserting a round in the chamber is improper and could cause accidental discharge, possible damage to the firearm or personal injury. Always load the firearm using the magazine. When loading the firearm, always point the muzzle in a safe direction.**

# FIRING

**POINT FIREARM IN SAFE DIRECTION WHILE KEEPING YOUR FINGER OFF OF THE TRIGGER.**

7. When last cartridge has been fired, the bolt catch is automatically engaged and the bolt carrier group is locked open (Figure 18-1).
8. Put safety selector on "SAFE" (see page 12).
9. Press magazine release to remove magazine.
10. Carefully inspect chamber to make sure it is empty (Figure 18-1).

**CAUTION: Do not cover the ejection port with your hand when firing your rifle/pistol.**

**WARNING** **Firearm is not empty or unloaded until the magazine is removed and the chamber is empty. To properly clear a firearm, remove the magazine, then pull charging handle back and check the chamber.**

Figure 18-1

Figure 18-2

# UNLOADING

1. Rotate safety selector to "SAFE" position (see page 12).
2. While pointing the muzzle in a safe direction, remove the magazine by depressing the magazine release and pulling the magazine out (Figure 19-1).
3. With your finger off trigger fully retract charging handle, ejecting cartridge.
4. Release/lower charging handle.
5. Push charging handle in closed position.
6. Re-inspect chamber to insure firearm is unloaded. Retract chaging handle and insert chamber flag and slowly lower charging handle. Push charging handle to the closed position.

Figure 19-1

**CAUTION: Step 3 is a crucial part of the unloading process. Do not depend on the fact that no casing was ejected on clearing. There could still be a live round in the chamber for any number of reasons. Make certain that you inspect the chamber to make sure that it is clear.**

**WARNING** **Never touch the trigger when loading or unloading the firearm.**

# MALFUNCTION WARNING!

**If cartridge hangs up, jams or binds when being chambered from magazine into chamber, do not attempt to force it into the chamber by pushing.**

**DO NOT COVER THE EJECTION PORT WITH YOUR HANDS WHEN LOADING/UNLOADING YOUR FIREARM.**

1. What to do:
   - **Point firearm in a safe direction while keeping your finger off of the trigger.**
   - Remove magazine.
   - Pull back on charging handle and allow cartridge to fall from firearm.
   - Do not cover the ejection port with your hands when loading / unloading your firearm.
   - If cartridge does not fall free, pull charging handle back and lock it in the rear position.
   - Carefully dislodge cartridge.
   - If cartridge cannot be removed, lock bolt carrier back, carefully store your firearm and magazines and take it to a competent gunsmith or call Springfield Armory® customer service.
2. Most failures to feed or chamber a cartridge are the result of a damaged magazine, improper firearm handling or defective ammunition.
3. Whatever the cause, a jammed cartridge can be a dangerous situation.

   **If you have any questions concerning information in this manual, call Springfield's Consumer Safety Department at 800-680-6866 for assistance.**

**WARNING** **Always have firearm pointed in a safe direction. Failure to obey safety information may result in injury to you or others.**

**Always wear eye and ear protection when using any firearm.**

**Safety and instruction manuals are available from Springfield, Inc.**

# TO ELIMINATE MALFUNCTIONS

- First try changing type/brand of ammunition and/or magazine.
- If changing to another type/brand of ammunition and/or magazine does not at once result in smooth feeding of cartridges from magazine to chamber, the following steps should be taken:
- Magazine should be removed first. Check chamber to be sure it and magazine well are clear of cartridges.
- Thoroughly clean magazine, paying particular attention to removing accumulated residue.
- Thoroughly clean breech mechanism of firearm. Use a bristle brush and solvent to remove residue and fouling from breech face, extractor, chamber and feed ramp. (See **Detailed Maintenance and Cleaning** section for detailed instruction).
- Check that magazine spring tension is adequate; the spring should hold the follower tightly against the lips of the magazine.
- Check that magazine lips are free of nicks and burrs and are not deformed.
- Remove excess oil and solvent from all cleaned components, load magazine and try firearm again.

**WARNING** **An obstructed, cracked or damaged barrel should never be used and the firearm should be returned to Springfield for inspection.**

# FIELD STRIPPING & CLEANING

**NOTE: FIELD STRIPPING PROCEDURES ON THE HELLION ARE THE SAME REGARDLESS OF CALIBER.**
**Before performing any cleaning or maintenance, make sure the firearm is completely unloaded (this includes the magazine and chamber).**

**ALWAYS REMEMBER THE FIREARM IS ABLE TO FIRE WITH OR WITHOUT THE MAGAZINE IN PLACE.**

Figure 22-1

Figure 22-2

1. **Always use proper eye protection when cleaning firearms.**
2. **POINT GUN IN SAFE DIRECTION WHILE KEEPING FINGER OFF THE TRIGGER.**
3. Remove magazine and unload firearm.
4. Fully retract the charging handle then release to completely close the bolt.
5. Rotate safety selector to "SAFE" position (See Page 12).
6. Extend the buttstock to its maximum length (See Page 5).
7. Push buttstock retaining pin outward, to its limit, from right to left (Figure 22-1) and grasp buttstock and rotate butt pad upwards slightly (5°) and withdraw buttstock assembly which contains the captured recoil spring and guide.
8. Retract charging handle to the rear which will expose rearward portion of bolt carrier. Grasp carrier and withdraw from receiver (Figure 22-2). Return charging handle to the forward position.

**NOTE: This level of disassembly is all that is required for routine cleaning.**

# FIELD STRIPPING & CLEANING

**NOTE: The safety should be applied and the hammer must be cocked to remove or install trigger pack.**

9. Remove the trigger pack by pressing upwards on the exposed locking tab (Figure 23-1), this will release the mechanism, grasp the rear of the pack adn withdraw from the receiver. ***DO NOT*** attempt further disassembly the trigger pack, it can be cleaned in this condition.

10. Remove the handguard by pushing the retaining pin outward to its limit, from right to left (Figure 23-2). Grasp the handguard and slide it forward and off the rifle (Figure 23-3).

**NOTE: The bolt carrier group must be removed prior to removing the carrying handle.**

11. Remove the carrying handle by depressing the carrying handle button from either side (Figure 23-4) and lift rear of the handle slightly, then pull rearward and off the rifle.

12. Remove the magazine well by pushing the retaining pin outward to its limit, from right to left. Rotate the front of the magwell down, then pull the magwell from the rifle (Figure 23-5).

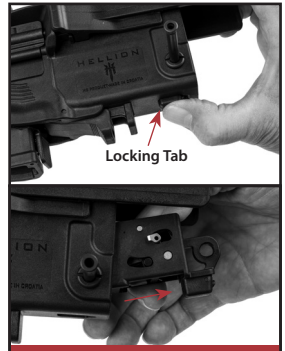

Figure 23-1

Figure 23-2

Figure 23-3

Figure 23-4

Figure 23-5

# FIELD STRIPPING & CLEANING

## BOLT CARRIER GROUP (BCG) CAN BE EASILY DISASSEMBLED FOR MORE DETAILED CLEANING IF NEEDED.

13. With a suitable punch, remove the firing pin retainer from left to right (Figure 24-1), then lift the firing pin safety lever to remove the firing pin and spring (Figure 24-2).
14. Depress the bolt into the carrier and rotate the bolt to the right until it stops. Insert the firing pin into the hole in the bottom of the carrier and press out the bolt cam key (Figure 24-3). Remove bolt from carrier.

**NOTE: We do not advise extractor removal unless you are experiencing extractor issues.**

BCG disassembly is now complete. Clean all parts with a quality powder solvent, rinse, dry and inspect. Lightly lubricate the bolt, wipe away any excess lubricant.

Figure 24-1

Figure 24-2

Figure 24-3

**WARNING** **If you decide to disassemble your Springfield Armory® firearm, do so properly. Improper disassembly and/or assembly will create unsafe conditions that could result in injury or death, or a firearm that simply will not work. Don't take chances. Do not attempt to disassemble this or any other firearm until you have received training and instructions from a competent gunsmith.**

# FIELD STRIPPING & CLEANING

## REASSEMBLY OF THE BOLT CARRIER GROUP (BCG)

**NOTE: The Hellion can be configured to eject from wither side of the rifle by changing the assembly procedure fo the bolt. The ejection port covers must also be properly configured.**

15-R. For right side ejection: insert the bolt into the carrier with the extractor on the right side at the 10 o'clock position until the bolt bottoms in the carrier (Figure 25-1).

15-L. For left side ejection: insert the bolt into the carrier with the extractor on the left side at the 2 o'clock position until the bolt bottoms in the carrier (Figure 25-2).

16. Insert the cam key in the bolt with the top of the key angled/inclined to the chosen ejection port (extractor side of the bolt) (Figure 25-3).

17. Install the firing pin and spring into the bolt, then insert the firing pin retainer from right to left.

BCG reassembly is now complete.

18. Before reinstalling the BCG the ejection port covers must be configured for the chosen ejection side/direction.

**WARNING** **Make certain to re-install the cam pin in the BCG. The firearm can fire without cam pin and this creates a catastrophic EXTREMELY hazardous condition, that could cause property damage, personal injury or death.**

**WARNING** **If you decide to disassemble your Springfield Armory® firearm, do so properly. Improper disassembly and/or assembly will create unsafe conditions that could result in injury or death, or a firearm that simply will not work. Don't take chances. Do not attempt to disassemble this or any other firearm until you have received training and instructions from a competent gunsmith.**

Figure 25-1

Figure 25-2

Figure 25-3

# FIELD STRIPPING & CLEANING

## RECONFIGURING EJECTION PORT COVERS

19. Retract cheekpiece rearward 1/2" and then rotate the rear of the cheekpiece downward (Figure 26-1). This will allow access to the port cover locking pin.
20. Slide the pin rearward to remove (Figure 26-2) and re-install the pin in the ejection port cover that is not used and open the cover that will be used.
21. Clean the barrel bore and chamber with a quality bore solvent following the manufacturer's instructions.
22. Use a quality powder solvent to clean the carrier way (tunnel) of the receiver and lightly lubricate.
23. Brush or wipe away excessive fouling. Using a quality aerosol cleaning product is a simple method to clean the receiver. Follow the manufacturer's instructions.
24. Lightly oil all exposed metal surfaces of the BCG, receiver carrier way. Wipe away any excessive lubricant.

Figure 26-1

Figure 26-2

**WARNING** **Make certain to re-install the cam pin in the BCG. The firearm can fire without cam pin and this creates a catastrophic EXTREMELY hazardous condition, that could cause property damage, personal injury or death.**

**WARNING** **If you decide to disassemble your Springfield Armory® firearm, do so properly. Improper disassembly and/or assembly will create unsafe conditions that could result in injury or death, or a firearm that simply will not work. Don't take chances. Do not attempt to disassemble this or any other firearm until you have received training and instructions from a competent gunsmith.**

# NOTES

# REASSEMBLY

**NOTE: REASSEMBLY PROCEDURES ON THE HELLION ARE THE SAME REGARDLESS OF CALIBER.**

**Caution: Never allow live ammunition in the area while you are maintaining your firearms.**

1. Install the magazine well by inserting the round features at the rear of the magwell into their home in the receiver, then rotate upwards and press the retaining pin home (Figure 28-1).
2. Install the carrying handle by raising the rear of the handle about 15 degrees and pressing the handle forward into the fitment feature on top of the gas block , (Figure 28-2) and press down on the rear of the handle snapping it into place.
3. Replace the handguard by sliding it rearward over the and into the fitment tabs at the front of the carring handle (Figure 28-3) and press the retaining pin home.

**NOTE: The hammer must be cocked and the safety selector on safe before the trigger pack is installed.**

Figure 28-1

Figure 28-2

Figure 28-3

**WARNING** Make certain to re-install the cam pin in the BCG. The firearm can fire without cam pin and this creates a catastrophic EXTREMELY hazardous condition, that could cause property damage, personal injury or death.

# REASSEMBLY

**NOTE: REASSEMBLY PROCEDURES ON THE HELLION ARE THE SAME REGARDLESS OF CALIBER.**

**Caution: Never allow live ammunition in the area while you are maintaining your firearms.**

4. Replace the trigger pack by inserting the assembly onto the lower rear of the receiver at a front down angle of about 15° (Figure 29-1) pushing forward until it bottoms out in the receiver. Then press the rear downward until the tab snaps into position (Figure 29-2) completing installation.
5. Insert the bolt carrier group into the rear of the receiver above the trigger pack and press forward intil the rear of the carrier is flush with the cheek riser.
6. Install the buttstock by inserting the recoil spring into the rear of the bolt carrier pressing forward while aligning and inserting the cam key in its passage in the carrier (Figure 29-3). Slightly tilt the rear of the stock upwards and push the stock into position (Figure 29-4). Press the retaining pin home.

**NOTE: After re-assembly insure proper function of the trigger assembly by manupulating the charging handle, moving the selector to fire, and dry firing the rifle without ammunition.**

Figure 29-1

Figure 29-2

Figure 29-3

Figure 29-4

**WARNING** **Make certain to re-install the cam pin in the BCG. The firearm can fire without cam pin and this creates a catastrophic EXTREMELY hazardous condition, that could cause property damage, personal injury or death.**

# DETAILED MAINTENANCE

**Detailed maintenance should be performed every 2,000 rounds.**

1. Check to make sure firearm is not loaded.
2. Field strip the firearm as detailed on page 22.
3. Scrub the bolt (including the extractor) with a nylon brush dipped in solvent. Pay particular attention to removing build up of any type in the extractor groove. Wipe away any remaining solvent with a rag or cloth.
4. Scrub the bolt carrier, firing pin and the interior of the receiver with a nylon brush dipped in cleaning solvent.
5. Clean the firing pin hole and firing pin cavity of the bolt with a pipe cleaner.
6. Wipe away any remaining solvent thoroughly with a rag.
7. Apply a moderate coat of lubricant to the cavity on the carrier into which the bolt is installed.

# LUBRICATION POINTS

1. Bolt carrier body and cam pin, especially along the runners on the bottom of the carrier and the bosses on the rear. Place two drops of lubrication into cam pin slot.
2. Inside of the receiver.

# ADJUSTABLE GAS BLOCK

Hellion rifles are equipped with a two-mode adjustable gas block. One mode is for firing with a sound suppressor "S" and the other is for normal firing "N" (Figure 31-1). To change modes simply depress the selector knob and rotate to the desired firing mode (S or N) (Figure 31-2). If not using a sound suppressor, make sure the device is in normal "N" mode. Firing the rifle in "S" mode without a sound suppressor may cause malfunctions.

Figure 31-1

Figure 31-2

# ADJ GAS BLOCK CLEANING

1. Remove the handguard and carrying handle as described on page 23.
2. Retract the rod from the piston and lift and remove the rod and spring (Figure 31-3).
3. Remove the piston (Figure 31-4).
4. Clean the piston and piston bore of the gas block with a quality cleaning solvent. Dry both parts thoroughly and re-assemble.

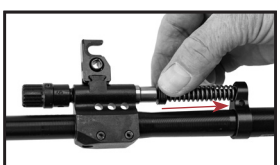

Figure 31-3

Figure 31-4

# HELLION PARTS LIST - 1 OF 4

4 Charging Handle Pin
5 Charging Handle Screw
6 Rear Charging Handle Positioner
7 Front Charging Handle Positioner
8 Charging Handle
9 Cocker
10 Cocker Pin Lever Assembly
16 Carrying Handle Picatinny Rail
18 Carrying Handle
48 Rear Sight Carrier
65 QD Mount
76 Rear Sight Screw Washer
77 Rear Sight Regulator Ball Spring
78 Rear Sight Screw Spring
79 Rear Sight Regulator
80 Rear Sight Screw
86 Sight Torsion Spring
87 Sight Torsion Spring
88 Rear Sight Lock
89 Front Sight Lock
99 Cocker Pin Spring
100 Charging Handle Spring
106 Rear Sight Regulator Ball
108 Carrying Handle Positioner
111 Pin 3 x 26.4
113 Front Sight
114 Front Sight Regulator
115 Front Sight Post
116 Rear Sight
117 Rear Sight Cylinder Insert
118 Rear Sight Cylinder
119 Rear Sight Cylinder Screw
120 Front Sight Retainer Pin
121 Front Sight Regulator Ball Plunger
122 Sling Catch E-Clips
125 Carrying Handle Picatinny Rail Screw
126 Sling Catch, Right
131 Carrying Handle Lock/Release Button
146 Sling Catch, Left
147 Roll Pin 2 x 10
172 Sight Regulator Ball
173 Pistol Grip Washer

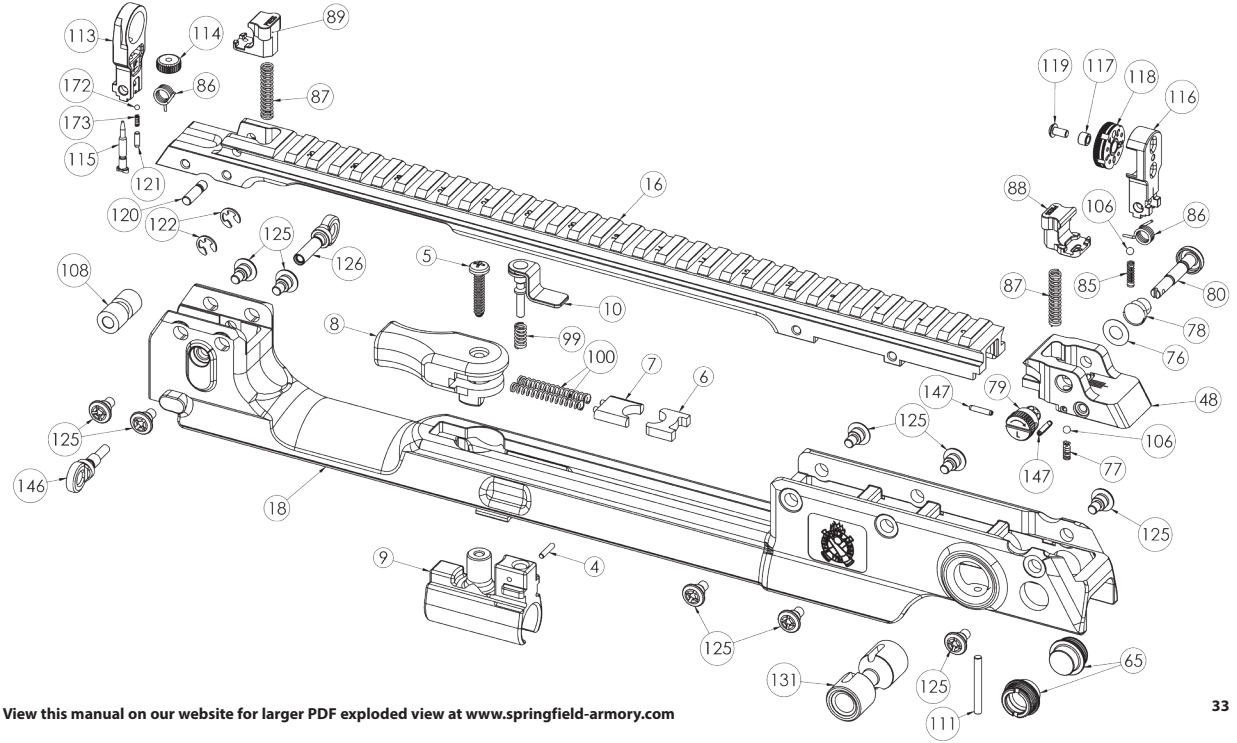


**View this manual on our website for larger PDF exploded view at www.springfield-armory.com**

# HELLION PARTS LIST - 2 OF 4

38 Trigger
39 Piston Spring Support
41 Spring Pin for Carrying Handle Carrier
42 Positioner for Carrying Handle Carrier
43 Carrying Handle Carrier
44 Trigger Carrier Pin
45 Trigger Middle Spring
46 Trigger Carrier
47 Roll Pin 5 x 20
51 Handguard QD Mount
53 Handguard
57 Trigger Sping
58 Trigger Carrier Pin Retainer Spring
62 Gas Block Regulator Spring
63 Gas Block Regulator Spring
67 Roll Pin 3 x 10
68 Barrel
90 Piston Ring
91 Piston Spring
92 Piston Rod
93 Piston
94 Gas Block
176 Flash Hider
177 Crush Washer

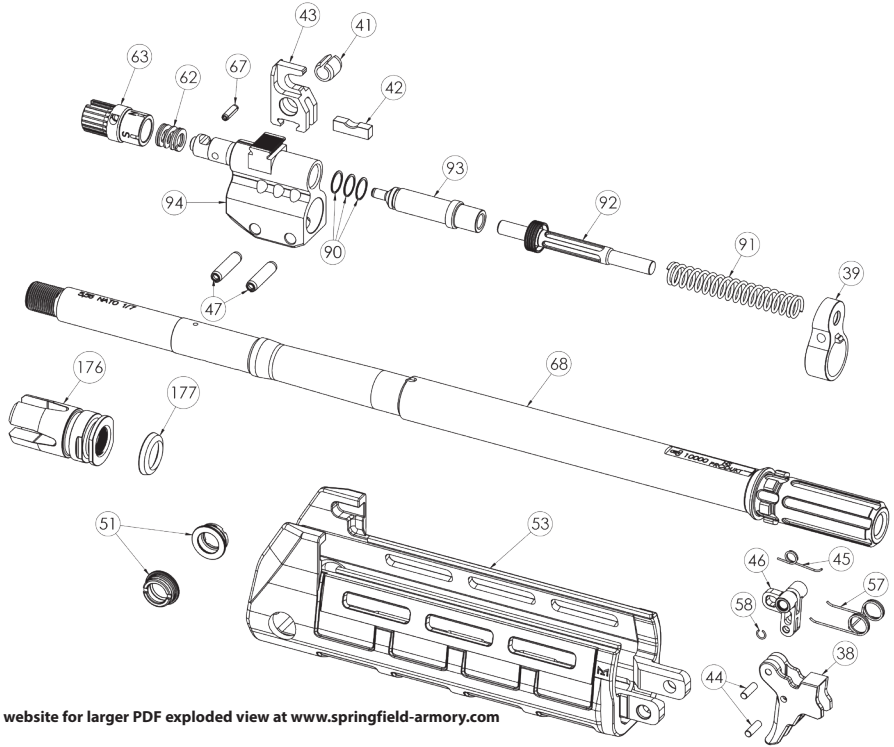


**View this manual on our website for larger PDF exploded view at www.springfield-armory.com**

# HELLION PARTS LIST - 3 OF 4

1 Bolt Carrier w/ Guide Rod Assembly
2 Extractor Spring
11 Ejector
12 Ejector Spring
13 Extractor Pin
14 Dust Cover Lock Pin
17 Receiver
21 Safety Selector Left Lever
22 Safety Selector
26 Bolt Catch Release Lever
27 Spring Hammer
29 Receiver/Buttstock Retaining Pin
35 Firing Pin - Pin
36 Firing Pin
37 Bolt
50 Bolt Catch
59 Trigger Pin
60 Receiver & Buttstock Safety Pin
61 Carrier for Receiver & Buttstock Safety Pin
66 Sear Lever Safety Pin
69 Sear Levar Spring
70 Sear Lever Safety
71 Disconnector
72 Hanner
75 Sear Lever Positioner
81 Sear & Disconnector Spring
83 Sear Lever Spring
84 Sear Lever
95 Bolt Catch Spring
96 Firing Pin Block Safety
97 Firing Pin Block Spring
98 Firing Pin Spring
102 Firing Pin - Pin Safety
103 Ectractor Elastomer Spring
107 Dust Cover Lock Pin
109 Cam Pin
110 Carrying Handle Lock Spring
112 Extractor
127 Buttstock Catch
128 Bolt Catch Release Crank Pin
129 Pistol Grip Pin
130 Barrel Block Pin
133 Dust Cover Block Pin
134 Safety Selector Right Lecer
135 Carrying Handle Lock
137 Buttstock Limiter
145 Roll Pin 2 x 8
148 Firing Selector Pin 1.5 x 11.8
149 Roll Pin 2 x 18
150 Carrying Handle Spring Carrier
151 Barrel Lock Spring
152 Barrel Lock Pin
153 Barrel Lock Lever Pin
154 Barrel Lock Lever
156 Dust CoverPlunger
157 Dust Cover Plunger Retainer Pin
158 Dust Cover Retainer Pin
160 Dust Cover Lock Spring
161 Dust Cover Lock
162 Dust Cover Pin
163 Dust Cover Spring
164 Dust Cover Releaser Spring
166 Carrying Handle Spring Rod
167 Barrel Lock
168 Bolt Catch Release Crank
169 Bolt Catch Release Crank Spring
170 Cheek Rest

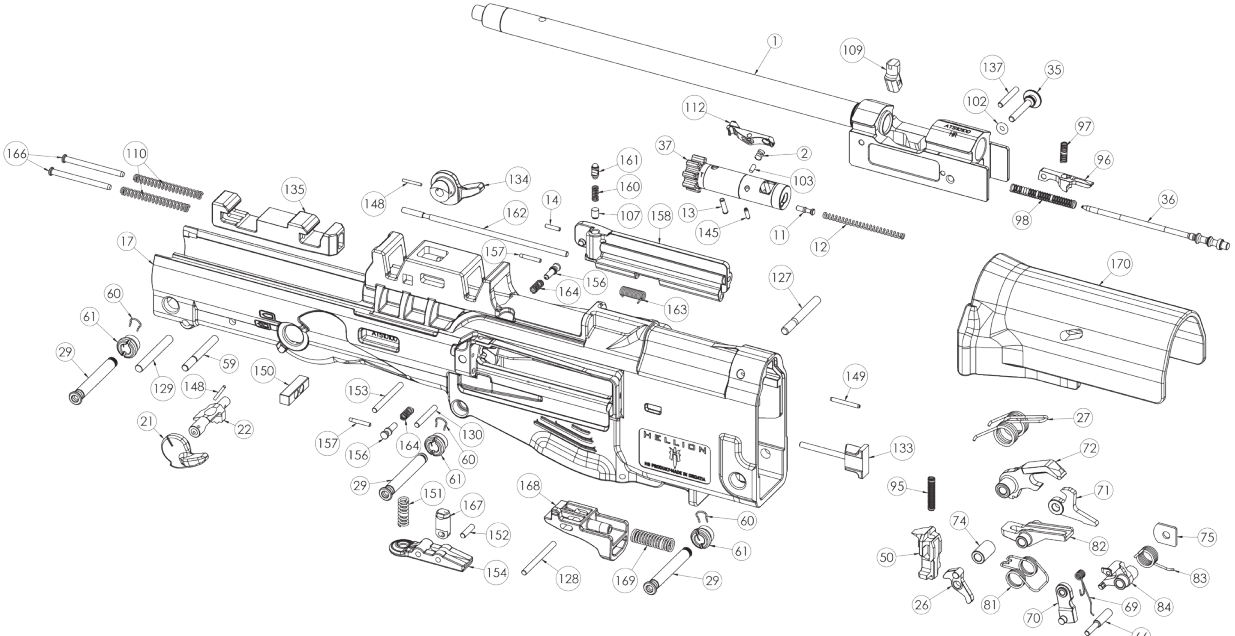


**View this manual on our website for larger PDF exploded view at www.springfield-armory.com**

# HELLION PARTS LIST - 4 OF 4

3 Recoil Spring Pin
14 Dust Cover Lock Pin
15 Magazine Release Pin
19 Buttstock
20 Buttstock Carrier
23 Magazine Release Spring
24 Magazine Release
25 Magazine Well
28 Trigger Mechanism Pin
30 Buffer
31 Recoil Spring
32 Recoil Spring Guide Rod
33 Recoil Spring RIng
34 Recoil Spring Carrier
49 Pin for Bolt Catch Release Lever
54 Firing Selector Positioner Spring
55 Piston Grip Nut
56 Trigger Guard
64 Buttstock Pin
65 QD Mount
67 Roll Pin 3 x 10
73 Triggering Housing
101 Buttstock Connector
104 Pin 4.5
105 Locking Bolt Block
107 Dust Cover Lock Pin
111 Pin 3 x 26.4
123 Trigger Mechanism Lock Pin
124 Firing Selector Position Pin
132 Triggering Mechanism Lock
136 Buttstock Lever Spring
137 Buttstock Limiter
138 Buttstock Spring
139 Buttstock Lock
140 Buttstock Lever
141 Buttstock Lever Pin
142 Buttstock Lock Pin
143 Locking Bolt Block Holder
144 Roll Pin 2 x 10
155 Buttstosk Connector
159 Dust Cover Left
160 Dust Cover Lock Spring
161 Dust Cover Lock
162 Dust Cover Pin
163 Dust Cover Spring
164 Dust Cover Releaser Spring
165 Safety Selector Positioner
171 Trigger Bar
173 Sight Refulator Ball Spring
174 Pistol Grip Screw
175 Pistol Grip

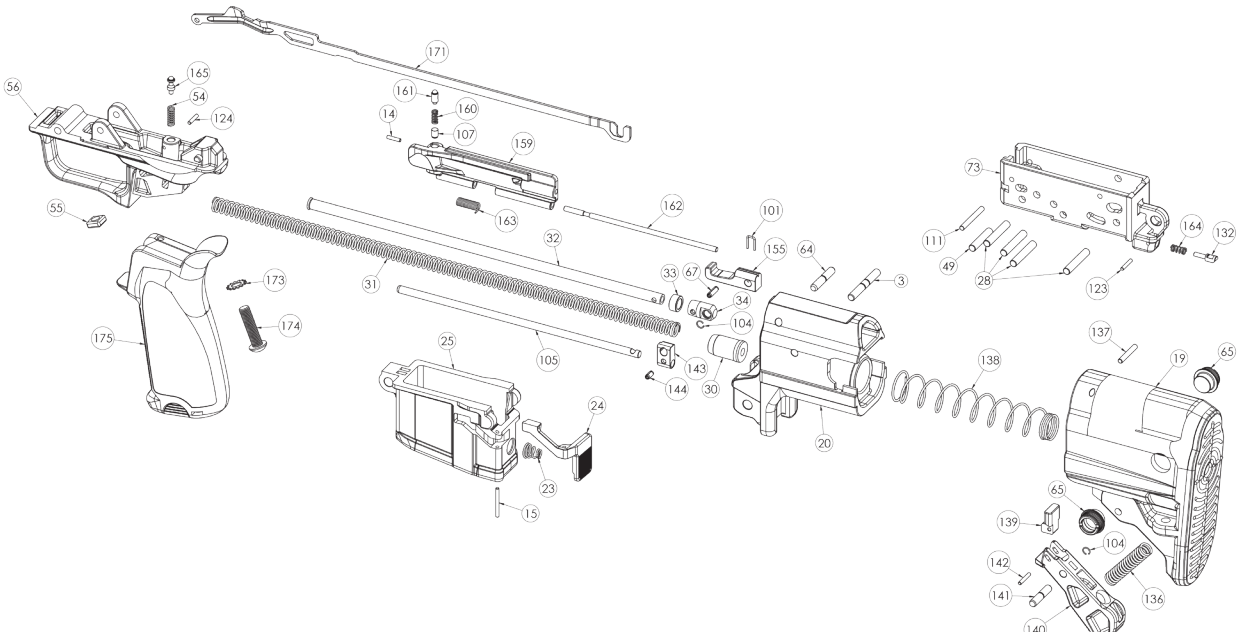


**View this manual on our website for larger PDF exploded view at www.springfield-armory.com**

# SIGHT ADJUSTMENT

Your HELLION rifle is equipped with adjustable sights. The rear sight adjusts the bullet impact horizontally (windage) and the front sight changes bullet impact vertically (elevation).

The rear sight has an adjustment knob on the left side of the sight (Figure 40-1).Turning the knob "clockwise" moves the bullet impact to the left. Counter clockwise moves the impact to the right. As the knob is rotated you will hear and feel distinctive "clicks". Each click moves the bullet impact 1/2" at 100 yards.

There are five apertures on the rear sight (Figure 40-2). Turn the aperture selector in either direction to your desired setting. There are five apertures to choose from, 0-1, 2, 3, 4 & 5 which are 100 Meter increments (5=500 meters).

The front sight is adjusted by turning the sight knob. Clockwise rotation raises the bullet impact and counter rotation lowers the impact (Figure 40-3). Each 1/4 turn of the sight post moves the bullet impact 2" at 100 yards.

Figure 40-1

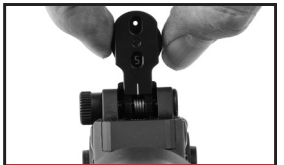


Figure 40-2

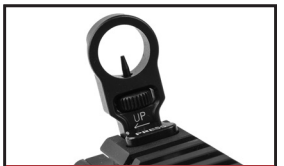


Figure 40-3

# CABLE LOCK

Step 1 - Point gun in safe direction while keeping your finger off the trigger.

Step 2 - Press magazine release and remove magazine.

Step 3 - Check to see that no cartridge is in the chamber.

Step 4 - Insert cable through the ejection port and out magazine well.

Step 5 - Lock cable into cable lock.

Step 6 - Grasp charging handle and ease forward.

**CAUTION: GUNS SHOULD ALWAYS BE LOCKED AND STORED IN COMPLETE COMPLIANCE WITH ALL APPLICABLE LAWS AND REGULATIONS.**

**Store key separately away from lock and out of reach of children. Springfield Armory® firearm boxes are also designed for an exterior lock. (Not Included)**

**This cable lock is supplied as an aid to your security measures.**

# SPRINGFIELD ARMORY® LIMITED WARRANTY

**SPRINGFIELD ARMORY® LIMITED WARRANTY**

This Limited Warranty is issued by Springfield, Inc., d/b/a Springfield Armory, an Illinois corporation ("Springfield" or "we" or "us" or "our") to "You" the original retail purchaser (also "YOUR") of a Springfield product (the "Product"). This Limited Warranty gives You specific legal rights, and You may also have other rights which vary from state to state.

**WHO AND WHAT IS COVERED BY THIS WARRANTY?**

Springfield, Inc. warrants to You, the original retail purchaser of the Product, that the Product You purchased will be free of defects in workmanship or material, subject to the terms of this document.

**HOW LONG WILL THIS WARRANTY LAST?**

This Warranty will be in effect during the time that YOU, the original retail purchaser, own the product. Proof of original purchase required.

**WHAT DO YOU HAVE TO DO FOR WARRANTY SERVICE?**

You must take 3 steps to get warranty service. Notify us by phone, email, fax, or mail. If You discover a defect in material or workmanship, You must notify us by telephone, email, fax or mail at once of the Warranty Service Contact Points. Warranty Service Contact Points:

Telephone: 800-680-6866
Email: warranty@springfieldwarranty.com
Fax: 309-944-3676
Mail: Springfield Armory
420 West Main Street
Geneseo, Illinois 61254
Attn: Warranty Service

Write a brief description of the defect. Please write down a brief description of the defect and how YOU experienced or discovered the defect. Follow the return instructions you receive from Springfield. Once we receive Your notification for warranty notice at one of our Warranty Service Contact Points, we will provide You with a shipping coupon (so that we can pay for the shipping) and instructions on how to return Your Product for service. You must follow the shipping instructions once You receive them.

**WHAT WILL SPRINGFIELD DO IF YOU DISCOVER A DEFECT?**

If, during YOUR ownership of the Product, one or more parts of the Product fail due to defects in materials or workmanship, Springfield will provide, free of charge, a new, repaired or reconditioned (decided at our discretion) Product. That new, repaired or reconditioned Product will be warranted for the remainder of YOUR ownership of the Product under these terms and conditions.

**WHAT IS NOT COVERED BY THIS LIMITED WARRANTY?**

This Limited Warranty does not cover any damage or condition determined by Springfield to be caused by: unauthorized repairs, disassembly, adjustments or modifications, carelessness, negligence, misuse, or unsafe handling, normal wear and tear, failure to properly or reasonably store, use, or maintain the product, hand-loaded, reloaded, remanufactured, or defective ammunition.

**⚠ WARNING**

**The HELLION, like all firearms, is a dangerous weapon if not handled properly.**

## LIMITATION OF LIABILITY AND DISCLAIMERS

This limited warranty is provided in lieu of any and all express warranties. All implied warranties, including implied warranties of merchantability, non-infringement and fitness for a particular purpose, are limited in duration to the duration of the warranty period (the original purchaser's (your) ownership of the product) and no warranties, hether express or implied, will apply after such period.

Some states do not allow limitations on the duration of an implied warranty, so the above limitation may not apply to you. Springfield's responsibility for malfunctions and defects in the product is limited to the terms set forth in this limited warranty. The preceding limited warranty constitutes springfield's only obligation to you and represents your exclusive remedy against springfield. In no event will springfield be liable for incidental, special or consequential damages, regardless of whether your claims are based on breach of contract, tort (including negligence and strict liability) or other theories, including, without limitation, any liability for economic loss, bodily injury, property damage or for any damage that may result from your use or ownership of the product, whether foreseeable or not. Some states do not allow the exclusion or limitation of incidental or consequential damages or certain other exclusions contained in warranties, so the above limitations or exclusions may not apply to you. The limitations set forth in this limited warranty shall not apply to the extent that they are prohibited by law.

No person or entity is authorized to give any other warranty or to assume any other obligation on behalf of Springfield. Any provision of this Limited Warranty prohibited or unenforceable in any jurisdiction shall be ineffective only to the extent of such prohibition and shall not invalidate any of the remaining provisions of this Limited Warranty.

## GOVERNING LAW/VENUE/CONSENT TO JURISDICTION

This Limited Warranty will be governed and construed in accordance with the law of the State of Illinois, without regard to Illinois' conflict of law rules. Any litigation between SPRINGFIELD and YOU or YOUR heirs, representatives or assigns shall be filed before a court of competent jurisdiction and venue in the 14th Judicial District of the State of Illinois. YOU HEREBY CONSENT TO THE IN PERSONAM JURISDICTION AND VENUE OF THE ILLINOIS COURTS, AND THAT SERVICE OF THE PROCESS MAY BE MADE UPON YOU AS PROVIDED BY ILLINOIS LAW.

## KEEP THIS CARD FOR YOUR RECORDS

**Serial Number** _____

**Date Of Purchase** _____

**Place Of Purchase** _____

## ACTIVATE YOUR WARRANTY ONLINE AT:

www.springfieldwarranty.com/StartWarranty.asp

And recieve a coupon for specific discounted items on our webstore.
Magazines, shirts, hats, range bags and much more.

# SPRINGFIELD ARMORY®

420 WEST MAIN STREET, GENESEO, IL 61254 • 800-680-6866

**Safety and instruction manuals are available from Springfield, Inc.**

**Always wear eye and ear protection when using any firearm.**

**DOWNLOAD THIS MANUAL ON OUR WEBSITE: WWW.SPRINGFIELD-ARMORY.COM**

Always check website for updated versions of operation & safety manuals

2214

Copyright 2021. Contents property of Springfield, Inc. All rights reserved.